Air Alliance
Airports and Aviation Consultants

Introducing Laser Scanning Technology and applications

What is laser scanning?

When applied to the Construction industry, and more specifically to that of Surveying, laser scanning is the process of using a 3 dimensional sensor, a combination of radar and laser, with the aim to scan and map a surrounding environment. Laser scanning is a no contact, non-invasive and non-destructive technology.

Laser scanning allows enhancing the design process, speeds up and reduces data collection errors, saves time and money, and thus makes it a very attractive alternative to traditional data collection techniques.

Air Alliance
Airports and Aviation Consultants

High Precision Surveying

Air Alliance
Airports and Aviation Consultants

- 3D Laser Scanning is a technology that digitally captures the shape of physical objects using a line of laser light. 3D laser scanners create “point clouds” of data from the surface of an object.
- The scanner collect millions of individual point measurements within minutes. The measurements are then plotted within a single XYZ coordinate system to form a ‘point cloud’ of the object’s external surface.
- With the addition of GPS data these points can be geo-referenced and transformed into a global reference system. Multiple data clouds collected from different viewpoints can also be combined (“registered”) using common features in order to create one 3D dataset.

A Wide Range of Applications

3D scanning is also used for mobile mapping, surveying, scanning of buildings and building interiors, and in archaeology. Below is an non-exhaustive list of applications for laser scanning:

- As built surveying
- Architecture & Facade Measurements
- Archaeology & Cultural Heritage
- MEP modeling for BIM applications
- Tunnel Surveying
- Civil Engineering
- Topography
- Construction geometrical monitoring

Air Alliance
Airports and Aviation Consultants

Our Equipment

Air Alliance
Airports and Aviation Consultants

At Air Alliance we have equipped ourselves with two **RIEGL VZ-400** 3D Terrestrial Laser Scanner.

Specifications key figures:

- Range: 600 meters
- Accuracy: 3 mm
- Data collection: 122,000 points per second

The Process

On Site – Gathering Point Clouds

The 3D scanner generates what is referred to as a Point Cloud, which is a set of data points forming a digital representation of the scanned area.

In Office – Merging Data Acquired and Generating BIM file. Once all necessary Point Clouds have been gathered, our team of engineers merge the data into a single file. Combining the various data points is a meticulous procedure that requires the attention of specialized professionals. Once the merged file has been completed, it is possible to transform it into a BIM file which can be used differently according to the Client's needs.

Air Alliance
Airports and Aviation Consultants

Structures

Air Alliance
Airports and Aviation Consultants

A building can be scanned from the outside to include all external walls and then from the inside. Once registered together, a full 3D scan data of the structure is available. From there, a number of applications are available:

- Creation of as built drawings
- Design of sections
- Design of upgrades
- Use of the model for facility management purposes

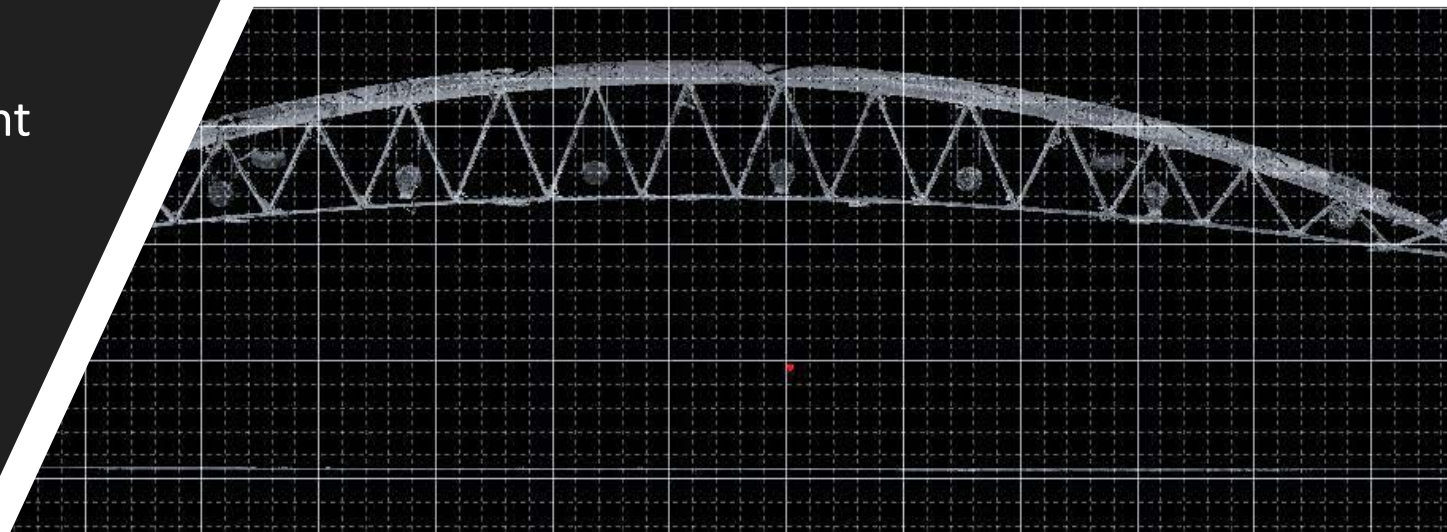

Architecture

Air Alliance
Airports and Aviation Consultants

Laser scanning allows the Architect to rapidly obtain an accurate 3D mapping of the existing structure that is to be remodeled/redesigned. The survey can be carried out indoors and/or outdoors depending on the requirements.

With the generated BIM file, the Architect can digitally alter the site with accurate and real time information. This allows limitless possibilities, and a level of accuracy that was hardly possible with previous surveying methods. The BIM file can also be used to produce a rendering or an animation.

Plants and Piping systems

Air Alliance
Airports and Aviation Consultants

- Document precisely in 3D the current state of the property as the planning basis for conversions and extensions.
- Accurately model existing piping and equipment allowing for clash detection prior to installation of new equipment.
- 3D data can be used for modelling and planning in 3D e.g. BIM. Additionally the point cloud data can be used to take any number of measurements without having to physically go to site.
- It helps generating as-built documentation of assets. Consulting Engineers can reverse engineer CAD models for process plant design and maintenance

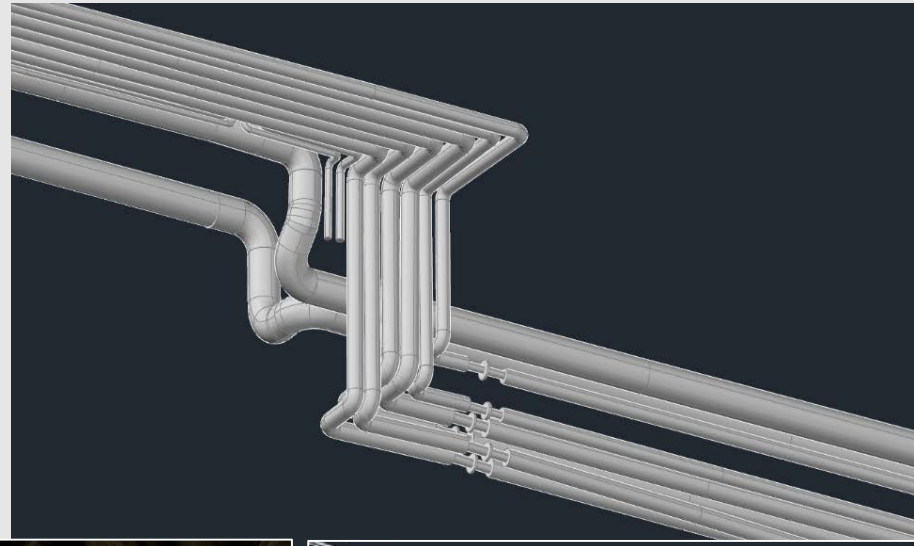

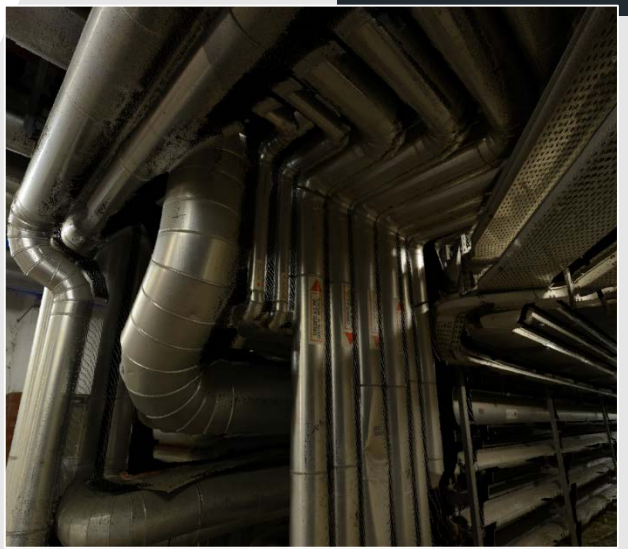

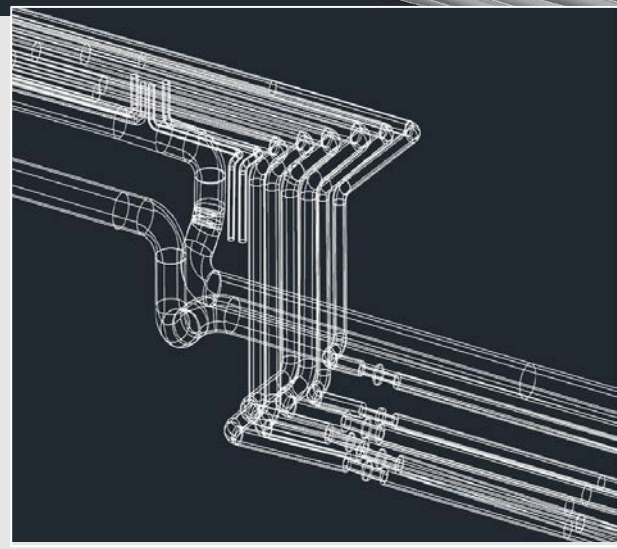

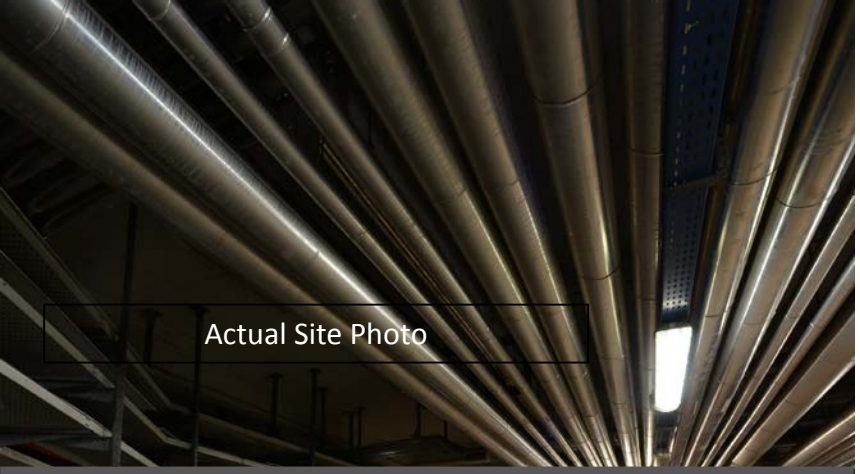

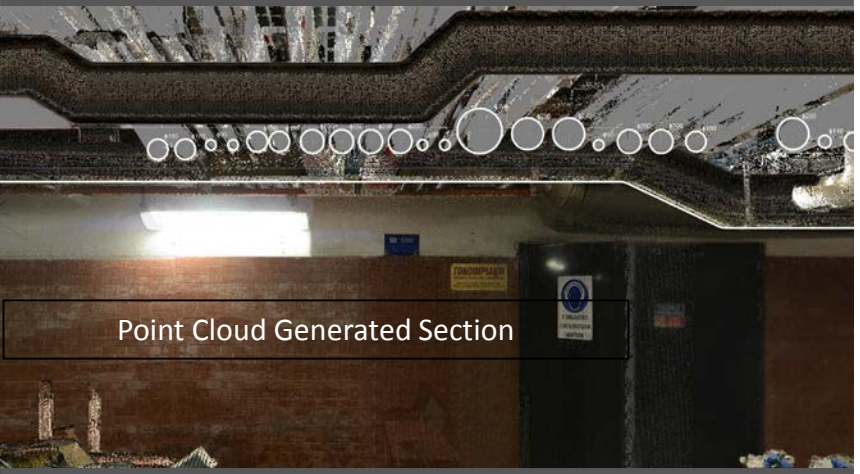

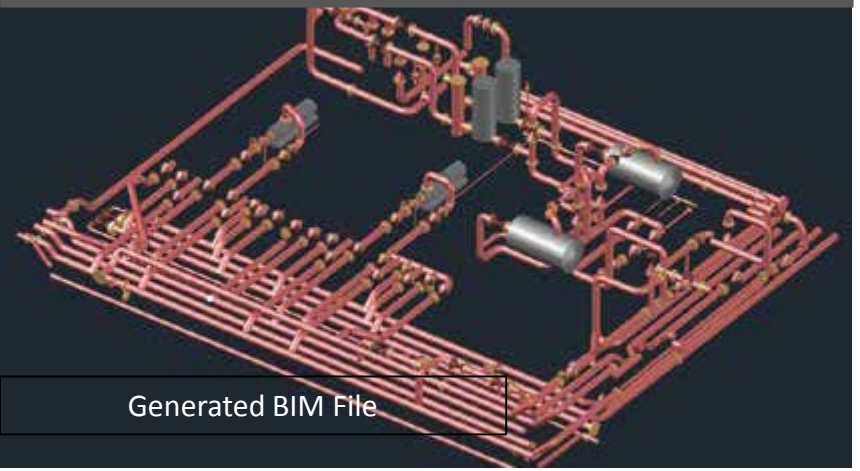

Facility Management

Whether its due to the age of the building, or the poor processing of information from the AEC Teams, the Facility Managers (FM) do not necessarily have an accurate record of the facilities they handle. With laser scanning technology, it is now possible to produce a BIM file and label each item, and most notably the Mechanical Electrical and Plumbing (MEP) components of the facility. The FM can use this information to assess cost, maintenance requirements and generate operation guidelines as necessary.

Air Alliance
Airports and Aviation Consultants

Heritage asset

For restoration or scientific analysis, for securing protected buildings or for virtual presentations of historical sites, laser scanner offers the possibility of complete and detailed documentation of historical structures or excavation sites.

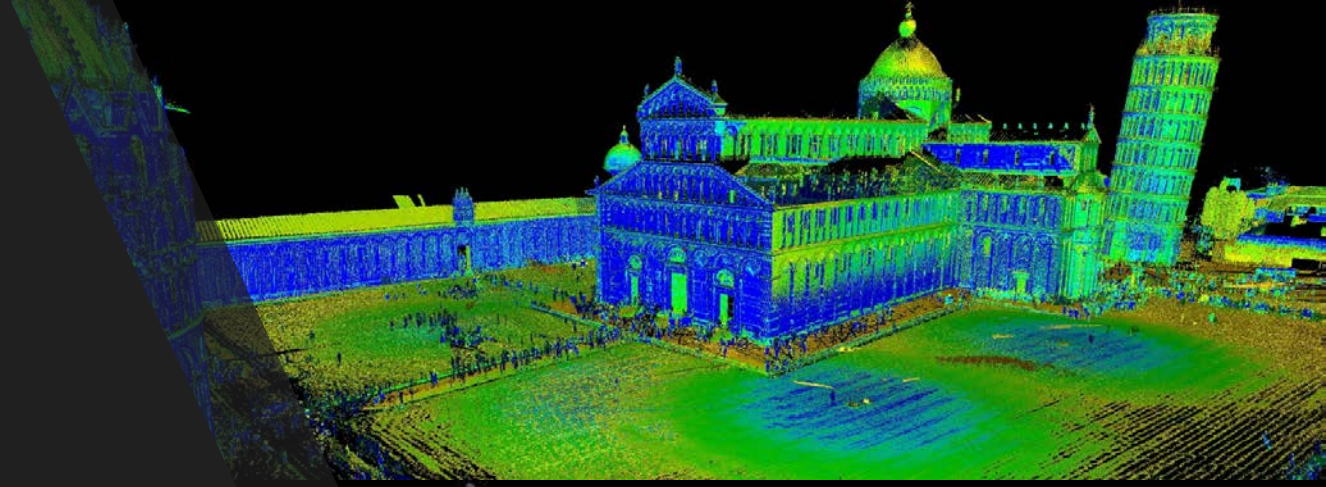

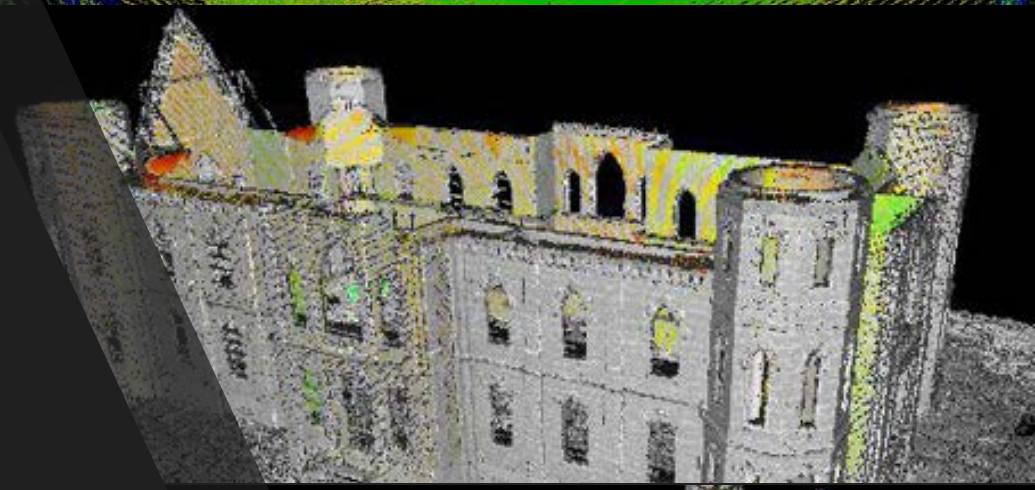

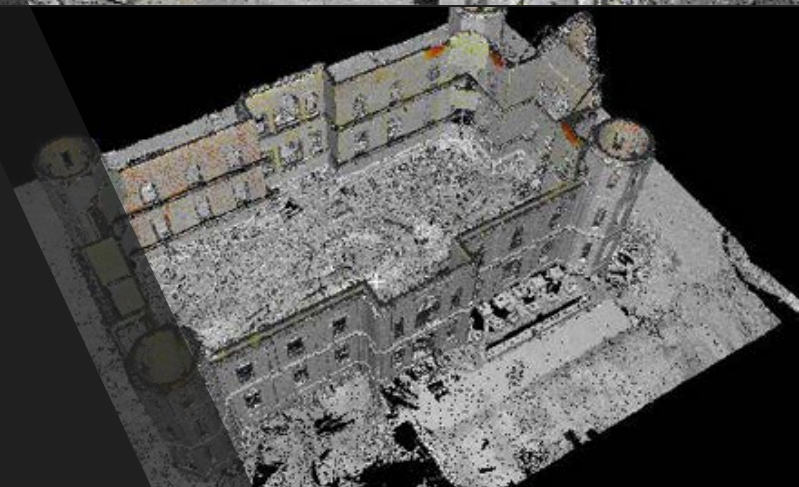

Air Alliance
Airports and Aviation Consultants

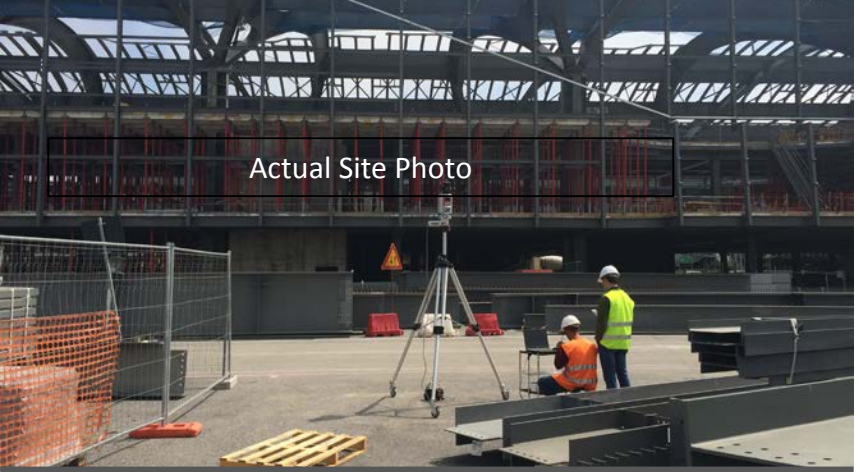

Measuring site progress

The Contractor or the Work Supervision can benefit greatly from the use of laser scanning. Indeed, laser scanning can allow the regular tracking of on site works and permit a comparative with the original construction drawings. Also, and mainly, having a BIM file can allow the assessment any potential clash between the various building systems.

Air Alliance
Airports and Aviation Consultants

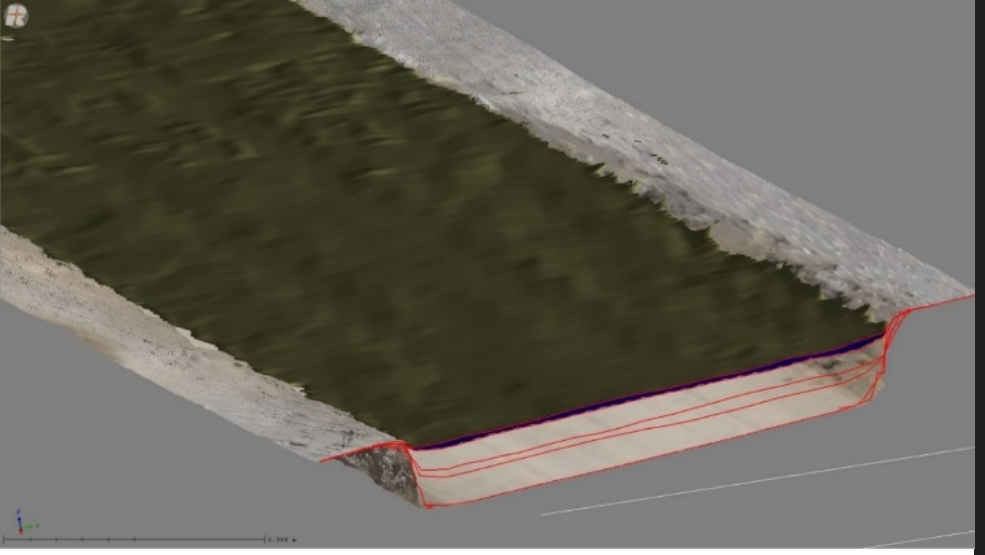

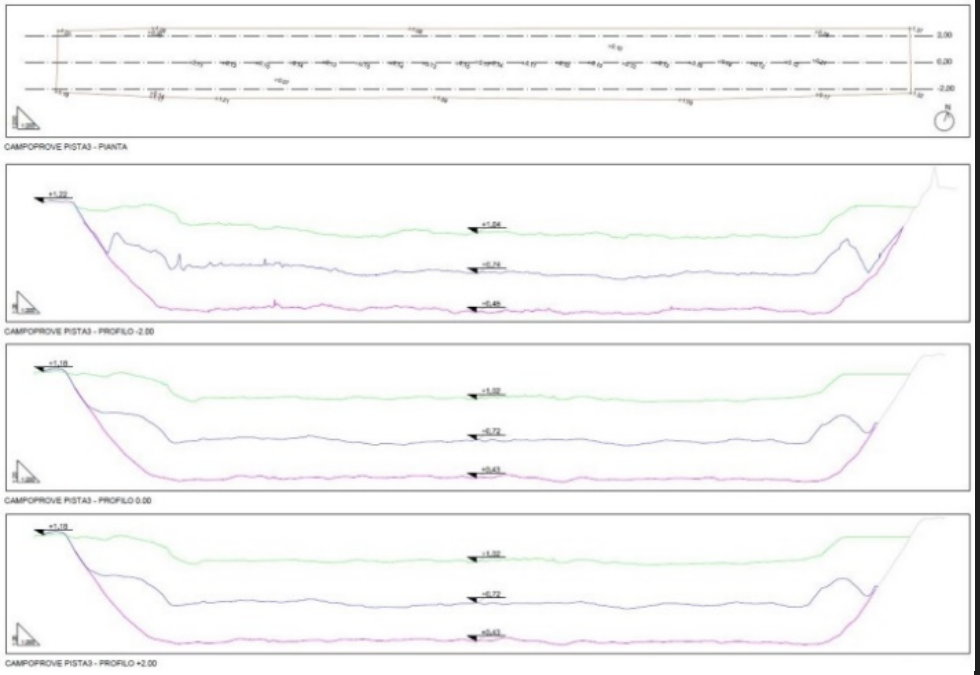

Construction Site Progress Monitoring

From the pavement scanning the works progress can be derived and a precise bill of quantities can be obtained. Same can be applied to any kind of construction site progress monitoring:

- Seamless capture and monitoring of construction progress for legal and technical documentation.
- Project supervision: whenever there are excavations, bridges, towers, open-pit mines, roads, railways, reservoirs, pipelines to be built, there is a need for close monitoring of the individual project phases to meet the project's requirements.
- It can also be used as a quality control in new construction. Comparing the as-built conditions to the design intent (either with measurements or against the BIM).

Air Alliance
Airports and Aviation Consultants

Forensic and Accidents scenes

Laser Scanner is ideally suited to perform rapid and complete 3D recordings of crime and accident scenes or insurance damage. All details of relevance in any subsequent reconstruction of the crime or accident are covered.

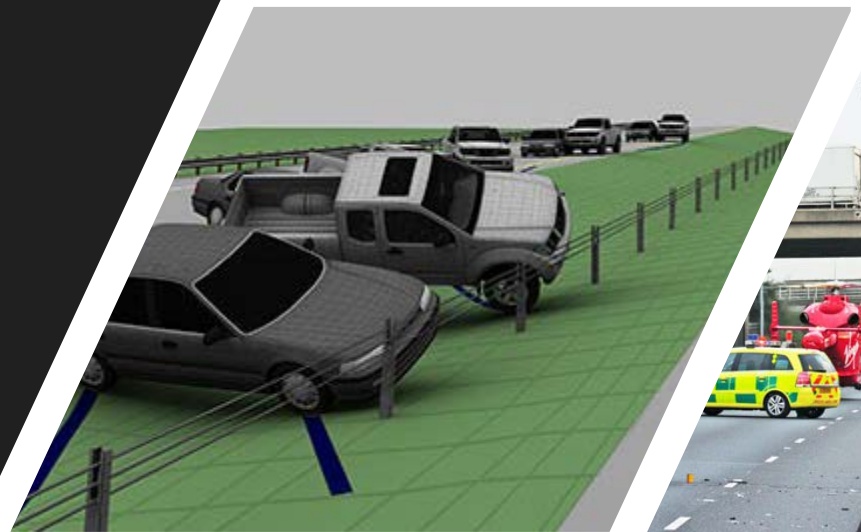

Air Alliance
Airports and Aviation Consultants

Air Alliance
Airports and Aviation Consultants

www.airalliance.eu
info@airalliance.eu
+39 339 77 55 177
+39 347 70 99 926

We have the right solution for you